УДК 615.47:616-072.7

INTELLECTUAL SUPPORT OF ADOPTION OF PREVENTIVE DIAGNOSTIC DECISIONS IN SCREENING OF DISEASES

Artemenko M. V., Shchekina E.N.

Kursk, Russia, FSEI HE South-West State University , Department of Biomedical Engineering

Abstract: The materials devoted to design and operation of the automated systems of support of adoption of the preventive diagnostic decisions in the course of screening directed for increase in effectiveness and quality of medical and diagnostic process are presented in article. The technology screening diagnostics of diseases by results of inspection of a condition of an organism in the course of screening is considered. The author's mathematical structures, algorithms and technologies allowing to synthesize differential and alternative diagnostic decisive rules are offered. The ER-model of system of diagnosing and results of application of prototypes of the offered model of intellectual support of system is given. Good structure of the offered algorithms and technology for creation of the software of the corresponding knowledge bases and their productive application in medicine is emphasized.

Keywords: screening of diseases, diagnostics, the automated systems of support of decision-making, ER – model, productional diagnostic rules.

The ministry of health of the Russian Federation considers informatization of medicine and health care of the country the priority direction providing development and deployment in broad medical practice of the modern latest technologies directed to further improvement of health of the population of the country on the basis of development of highly effective methods of diagnostics, prevention and treatment with use of the computer equipment and methods of the system analysis [5, 11, 15, 18].

Effectiveness and quality of preventive diagnosis of socially important diseases in the course of screening means use of information and computer technologies with use of tools of artificial intelligence now.

IT – technologies, in this case, are based on concepts of system approach to understanding of regularities of functioning of the analyzed functional and-or physiological systems of an organism. In clinical medicine the ideology of the system analysis is realized in theoretical and practical researches of Anokhin P. K., Sudakov K. V., Zavyalov A. V., Lishchuk V. A., Bayevsky R. M., Shebshayevich L. G., etc. [2, 9, 10, 13, 20, 22] - developers of fundamental bases of the theory of functional systems.

Now it is developed and a large amount of the automated medical information technologies proposing scientifically based medical solutions depending on features of the clinical picture which is shown at each stage of maintaining the patient [12, 20, 23] is developed. Complexity of medical problem area led to the fact that the greatest number of intellectual systems, among various areas are knowledge, is developed for health care. Their geography is quite extensive: Austria, Italy, China, Russia, France, Czechoslovakia, USA, Japan and other countries. A large number of the automated screening diagnostic systems of diseases, including preventive character is developed and is operated [11].

One of common faults is use in knowledge bases of these systems of private characteristics which allow to gain good diagnostic effect of a concrete nosology, but do not allow to estimate an integrated condition of an organism. Such approach assumes initial promotion of a hypothesis of existence of a certain disease and carrying out the corresponding preventive inspection. Meanwhile, at mass inspection of the population or screening of the general state registration of a set of various indicators without promotion of preliminary diagnostic hypotheses is carried out.

Use of the automated system for support of decision-making becomes possible thanks to realization of the algorithms imitating "medical logic", or using the formal methods of the mathematical analysis of medical data allowing to receive similar results [8, 15].

The essential moment defining the practical importance of system of support of adoption of diagnostic decisions is its efficiency in the conditions of various restrictions:

- deficiency of time for decision-making that has special value at medical emergencies and in extraordinary conditions;
- Incompleteness of data on clinical manifestations and the anamnesis of a disease, in particular in working conditions of doctors of emergency medical service;
- Uncertainty of data which cannot be specified by the doctor where methods of fuzzy logic can be used;
- need of the choice of additional researches on criteria of diagnostic efficiency and a possibility of their performance (with the indication of the degree of threat for the patient's life).

As biological systems are constructed by the self-organizational principle, it is advisable to carry out their mathematical modeling based on the similar basic principles of the organization. The method of Group Method of Data Handling (MGDH) is rather developed in this direction [14]. Considering existence of well worked and formalized mathematical apparatus which is based on the principles of creation of optimum organized biological systems there is a basic possibility of application of a method of the group accounting of arguments for the solution of such badly formalizable task as preventive screening - diagnosis of various diseases in the conditions of limited and diverse space of informative signs [15].

As a result of structural and functional decomposition of a problem of design of structure of some universal system of support of decision-making of the automated diagnosis of diseases the following subtasks are received:

1. Enrollment and storage in the database of banks of reference results of registration of system-wide and backbone indicators (for example, blood) on the main socially important groups of diseases. What it will be more created similar banks by, especially the wide range of nosology for diagnostics will be had by the developed system. It is also necessary to have bank of results of similar analyses for healthy faces.

2. Training of the automated system for the purpose of identification of parameters, characteristic of each nosology, on the basis of which analysis diagnostics will be performed further, - formation of diagnostic rules and functions to them. The algorithm which consists of the following stages [3, 6] is for this purpose offered:

a) Rationing of indicators which consists in algebraic division of value of an indicator into "norm" which can be defined both an average, and a median of values of a concrete indicator in group of healthy people.

b) For definition of expediency of use of parametrical methods define type of distribution of each of the studied parameters, using Kolmogorov-Smirnov's tests, Shapiro-Wilkie and $\chi 2$.

c) Carrying out the regression analysis: for the parameters having normal distribution Pearson's correlation is used, at abnormal distribution – rank correlation of Spirmen. (We will notice that in case of the training selections, small on volume, when there is no an opportunity to work in «Mediocristan» [19], it is not necessary to look for any semantics in values of parameters of regression models and to analyze reliability of the received structures by statistical methods).

d) Statistically significant, regression equations for each nosology are allocated.

3. Diagnostics of the arrived patient on the basis of results of inspection is performed as follows: on the identified regression equations the average square mistake – a deviation of real value of the registered indicator from settlement is estimated; average value and variation scope are counted [1].

4. Visual representation of the received results is carried out. The patient treats that group for which his projection in the "average value - variation scope" plane holds more left and lower position (with preference of "leftism").

5. When receiving further clinical confirmation of the preventive diagnosis of the specific patient transferring of its data from bank of the standards which are not diagnosed in bank is possible. At the same time, carrying out recalculation for receiving the specified diagnostic functions is recommended.

6. Differentiation of access to data. As data on patients – are confidential information, it is necessary to provide its protection against unauthorized access.

One of versions of the ER chart of system of support of decision-making on the basis of the offered algorithm at the logical level it is represented in the figure 1.

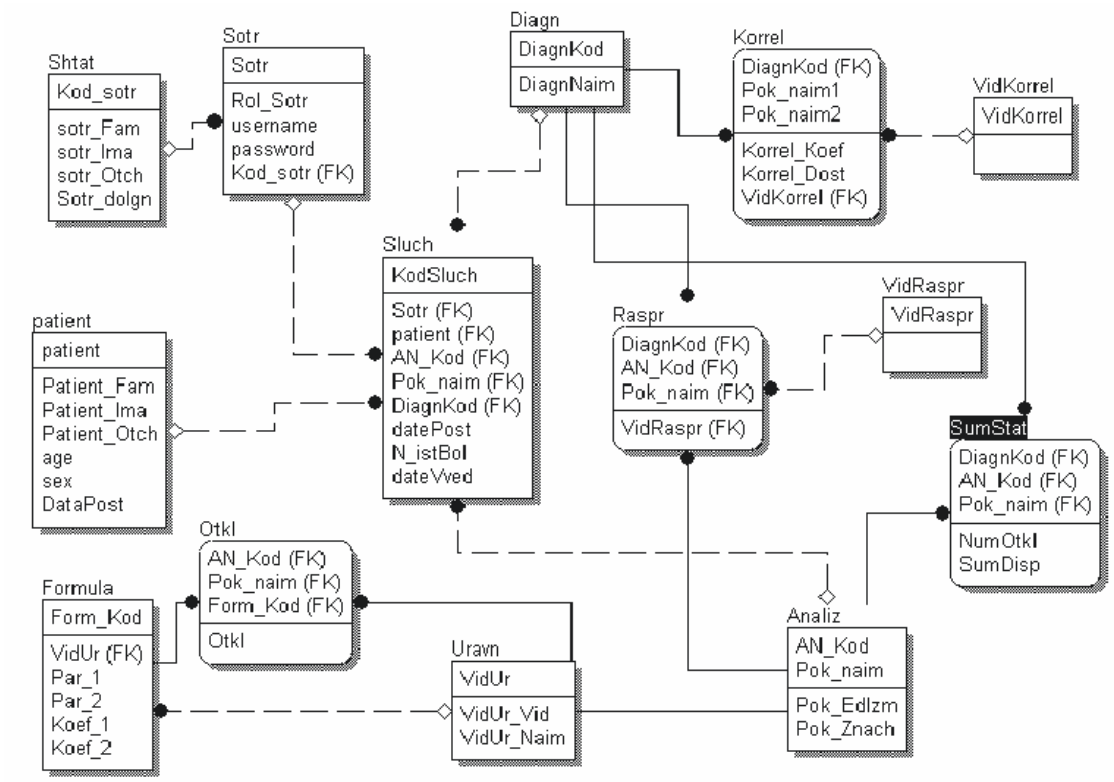

Figure 1 – Version of the ER chart at the logical level.

The generalized technology of formation of the universal look solving the rule accepted for differential preventive diagnostics is represented the following stages:

1. Upon termination of process of registration of values of indicators of a condition of the specific person the set is formed {with}.

2. On the received regressions at a grade level for everyone to an alternative hypothesis of belonging of a condition of the patient to a disease $\omega_k$values model values of indicators for a set $\{C\}_{\omega_k}$ pay off.

3. for everyone ω_k pays off values of a measure (criterion) of range of the sets received in items 1, 2 on a formula:

$$K_{\{c\}-\{C\}_{\omega_k}} = \frac{1}{\sqrt[2]{\frac{1}{m}\sum_{j=1}^{m}(c_j - C_{j.\omega_k})^2 + \varepsilon}},$$

where: m-the number of regressions in a class ω_k, ε – computing accuracy.

4. The coefficient of confidence of a measure of range of U_{ω_k} reflecting a possibility of accessory of an object of a research – the patient determined diseases or control group $\omega_k$by a formula is calculated:

$$U_{\omega_k} = 1 - \sum_{l=1,\, l \neq k}^{L} \frac{K_{\{c\}-\{C\}_{\omega_l}}}{L \cdot \sum_{r=1}^{L} \left(K_{\{c\}-\{C\}_{\omega_r}} \right) \cdot \max \left(\frac{K_{\{c\}-\{C\}_{\omega_l}}}{\sum_{r=1}^{L} \left(K_{\{c\}-\{C\}_{\omega_r}} \right)} \right)},$$

where: L – quantity of alternative classes.

5. We form productional decisive rules of a look:

1. IF $\boldsymbol{K}_{\{c\}-\{C\}_{\omega_k}} = \min_{j} \left(\boldsymbol{K}_{\{c\}-\{C\}_{\omega_j}} \right)$***, THAT state corresponds to a disease*** $\boldsymbol{\omega_k}$ ***with confidence*** $\boldsymbol{U_{\omega_k}}$***.***

Let's call this rule – "differential".

2. IF confidence $(\boldsymbol{U}_{\omega_d} > por)\,\&\,(\boldsymbol{U}_{\omega_d} \geq \left(1 - \prod_{l=1, l \neq d}^{L} \left(1 - \boldsymbol{U}_{\omega_l}\right)\right) \,\&\, \sum_{l=1. l \neq d}^{L} \left(\boldsymbol{U}_{\omega_l}\right) \neq 0)$**,**

THAT state corresponds to ***a disease*** $\boldsymbol{\omega_k}$ ***with confidence*** $\boldsymbol{U_{\omega_k}}$

Here: *por* – the threshold value defined in the expert way (it is recommended – *0,68≥por≥0,5*).

Let's call this rule – "alternative". Sense of the provided rule – the patient has a disease$\boldsymbol{\omega_k}$, and confidence in this hypothesis has to exceed uncertainty of belonging to others, alternative in this case, to diseases.

The technology of use of the offered automated system in the interactive mode consists in the following. The patient comes to healthcare institution. During inspection at it register certain characteristics which via the interface module come to the diagnostic module. The recommended diagnosis (or diagnoses and their "relative" probabilities) by means of the legal module is provided to the doctor in the standard, taken in this medical institution form. The doctor on the basis of the obtained information and clinical inspection of the patient makes the decision on application of a certain complex of additional diagnostic procedures or on tactics of medical actions.

The following positive results of application of analogs were prototypes of the offered approach were, for example [4, 5, 6, 7, 11, 14, 18]:

- Diagnosis of herpes and oncological diseases of a stomach;
- Analysis of tension of FS of the person operator;
- Analysis of development of a fruit;
- Analysis of the choice of an educational trajectory by the entrant.

Thus, the offered approach to design of knowledge bases of the automated systems of support of solutions of preventive diagnostics rather just is structured and, therefore, being implemented in program codes of the corresponding intelligent modules, is capable to increase effectiveness of screening on the basis of the system analysis of the state surveyed.

References

1. Alferova M.A., Mihalevich I.M., Rozhkova N.Ju. Osnovy prikladnoj statistiki (ispol'zovanie programmy Statistica v medicinskih issledovanijah) Irkutsk, 2005. Tom Vypusk 3. – 92 s.

2. Anohin P.K. Izbrannye trudy. Filosofskie aspekty teorii funkcional'nyh sistem. – M.: Nauka. 1978. – 70s.

3. Artemenko M.V., Dronova T.A., Shhekina E.N. Avtomatizirovannaja sistema diagnostiki hronicheskih zabolevanij pecheni na osnove biohimicheskih pokazatelej krovi. // Vestnik novyh medicinskih tehnologij. 2006. № 2. Tom XIII. S.151-152.

4. Artemenko M.V., Babkov A.S. Klassifikacija metodov prognozirovanija povedenija sistem //Sovremennye problemy nauki i obrazovanija. – 2013.№ 6.:URL: www.science-education.ru/113-11527

5. Artemenko M.V., Dronova T.A. Kolichestvennaja ocenka razlichij soorganizacii fiziologicheskih funkcij v diagnosticheskom processe // Vestnik novyh medicinskih tehnologij. 2006. №2. Tom XIII. S.127-129.

6. Artemenko M.V., Korenevskij N.A., Dronova T.A. Primenenie pokazatelej sistemnoj organizacii v diagnosticheskom processe. // Sistemnyj analiz i upravlenie v biomedicinskih sistemah. 2003. T. 2. № 1. - S. 16-20.

7. Artemenko M.V. Ocenka sostojanija patologicheskogo processa po funkcional'nym sdvigam // Fundamental'nye issledovanija. 2006. № 1. – S. 100-101;URL: http://fundamental-research.ru/ru/article/view?id=4673

8. Kobrinskij B.A. Sistemy podderzhki prinjatija reshenij v zdravoohranenii i obuchenii //Vrach i informacionnye tehnologii , 2010. №2. – S.39-45.

9. Baevskij R.M. Prognozirovanie sostojanij na grani normy i patologii -M., Medicina, 1979, 298 s.

10. Burakovskij V.I., Lishhuk V.A. i dr. Komp'juternaja tehnologija intensivnogo lechenija: kontrol', analiz, diagnostika, lechenie, obuchenie Rossijskaja Akademija medicinskih nauk. Moskva, 1995.
11. Voroncov, I.M., Shapovalov V.V., Sherstjuk Ju.M. Zdorov'e. Opyt razrabotki i obosnovanie primenenija avtomatizirovannyh sistem dlja monitoringa i skrinirujushhej diagnostiki narushenij zdorov'ja. – SPb.: OOO «IPK «Kosta»B, 2006. – 432s.
12. Dronova T.A., Zav'jalov A.V. Gormonal'nye sdvigi pri hronicheskih zabolevanijah pecheni //Vestnik Rossijskoj akademii medicinskih nauk. 2006. № 3. S. 11-14.
13. Zav'jalov A.V. Sootnoshenie funkcij organizma: jeksperimental'nyj i kliniko-fiziologicheskij aspekty. -M.: Medicina, 1990 -160 s.
14. Ivahnenko, A.G. Dolgosrochnoe prognozirovanie i upravlenie slozhnymi sistemami. – M.: Tehnika, 1975. – 313 s.
15. Intellektual'nye i informacionnye sistemy v medicine : monitoring i podderzhka prinjatija reshenij: sbornik statej //B.A. Kobrinskij i dr.- M.-Berlin: Direktor-media, -2016. 529 s.
16. Isaeva N.M., Subbotina T.N. Sistemnyj podhod k matematicheskomu modelirovaniju v biologii i medicine // Vestnik novyh medicinskih tehnologij. – 2000. T.VII. №3-4. S. 25-30.
17. Kljushin D., Petunin Ju. Dokazatel'naja medicina. Primenenie statisticheskih metodov – Vil'jans: Dialektika. 2008.- 320 s.
18. Popechitelev E.P. Sistemnyj analiz mediko-biologicheskih issledovanij Saratov: Nauch. kniga, 2009. – 366s.
19. Taleb Nassim Nikolas Chernyj lebed'. Pod znakom nepredskazuemosti. –M.: KoLibri, Azbuka-Attiku, 2017. – 736 s.
20. Sudakov K.V. Fiziologija. Osnovy i funkcional'nye sistemy lekcii.- M .: Medicina, 2000. - 772 s.
21. Federal'nyj zakon Rossijskoj Federacii ot 21 nojabrja 2011 g. N 323-FZ «Ob osnovah ohrany zdorov'ja grazhdan v Rossijskoj Federacii» Opublikovan 24 nojabrja 2011; obnovljon 18 maja 2015.
22. Shebshaevich L.G., Alekseev A.A. Zhizn' - kiberneticheskaja mediko-biologicheskaja sistemnost' (“Genom cheloveka”, klonirovanie kriticheskij analiz). - M.: Triada pljus, 2002. 608 s.
23. Artemenko M.V. Quantive measures for asessing functional state of the human body during the diagnostic process //Biomedical Engineering, 2008. V. 42. № 2. pp. 92-96.
24. Lishchuk V.A., Danilevich A.I., Gavrilov A.V., Shevchenko G.V. On the bnfrasctructure of information support of clinical medicine //Biomedical Engineering. 2003. V. 37. № 4. pp. 223-228.

The work is submitted to the International Scientific Conference «FUNDAMENTAL AND APPLIED RESEARCH IN MEDICINE» France (Paris), 19-26 Oct 2017, came to the editorial office on 19.09.2017