EXPERIENCE IN DEVELOPING AND PRACTICAL APPLICATION OF PRODUCTION TECHNOLOGY FOR GASOLINE COMPONENTS WITH IMPROVED ECOLOGICAL PROPERTIES

Sidorov G.M., Achmetov A.F., Abdulminev K.G., Zinnatullin R.R.,

Ufa State Petroleum Technological University,

Russia (450062, Ufa, Cosmonauts, 1), e-mail: kaskad@ufanet.ru

Summary: The problem of improving the quality of motor gasoline is one of the most important today. The article presents ways to reduce the benzene in motor gasoline. The experience of the development and application of energy-saving technologies for disposal of raw reformate fraction containing components that form benzene. Energy-saving method of separating the benzene fraction by sidestream of stabilization column, reforming product and processing the benzene fraction to high octane product with a low content of aromatic hydrocarbons by selective hydroisomerization. Technologies for obtaining heavy gasoline fraction containing no components that form benzene, in the primary distillation columns and the receiving quality feedstock for reforming and gas fractionation units, directly in the stabilization of gasoline. The technology is based on the fact that the separation of multicomponent mixtures in certain areas of the distillation column, main and in the stripping section, take place the accumulation of certain components. Given this feature, in the developed technology of separation, provided eduction these components from their zone of maximum concentration by sidestream of stabilization column.

Keywords: distillation column, the reformer, stripper, benzene, sidestream, hydroisomerization.

Stricter requirements for motor gasoline content of benzene and aromatic hydrocarbons forcing manufacturers to improve and increase the capacity of technological processes of the main components of modern gasolines. Benzene content of marketed petrol is mainly determined by its content in the reforming product, depending on the composition of raw materials and the conditions of the reformer. In the production of the commodity gasoline in Russia, catalytic reforming process is the most ambitious production of high-octane components, so the share of reforming product in the total fund of motor gasoline is about 60%.

In world practice, reduction of benzene in the gasoline product to the required standards are mainly carried out by removing benzene forming fraction of feedstock for catalytic reforming and removing benzene from reforming product on a special unit of the secondary division of gasoline fractions.

To solve the above problems is still in 1991-1992 for the first time in Russia was developed energy-saving technology for producing heavy fraction of gasoline that does not contain benzene forming fraction directly to the primary distillation columns [1, 2].

Tackling the gasoline fraction of the reinforcing section of the column partial topping oil feed it into a complex atmospheric column gives you the opportunity to reduce the selection of unstable

gasoline from the top of the first column. Sidestream output of the reinforcing section of the column a partial topping oil is supplied to the output zone sidestream in the stripping section of the atmospheric column, from the bottom of which is shown in a stable gasoline containing no benzene forming fraction. In this case, due to a significant reduction in the number of unstable gasoline obtained from the top of the columns, reducing the load of the column stabilization of raw material. Heat supply in the naphtha stripper for stripping light hydrocarbons by feeding of the hot jet of gasoline stabilizer [3].

The effectiveness of this technique is justified by the introduction of LK-6U Achinsk and Pavlodar refineries, protected by patents of the Russian Federation and the Republic of Kazakhstan [1, 4].

Also developed a technology for producing high-quality feedstock for reforming and gas fractionation, directly in the stabilization of gasoline, is implemented at two refineries in 1991-1993 and is protected by patents of the Russian Federation and the Republic of Kazakhstan [5, 6, 7, 8]. The proposed technology is shown in Fig. 1.

Despite benzene forming fraction removal from the reforming feedstock is less than 0.5%, the amount of benzene is formed by the dealkylation reaction is 1.0-1.5 wt%. depending on operating parameters of reforming.

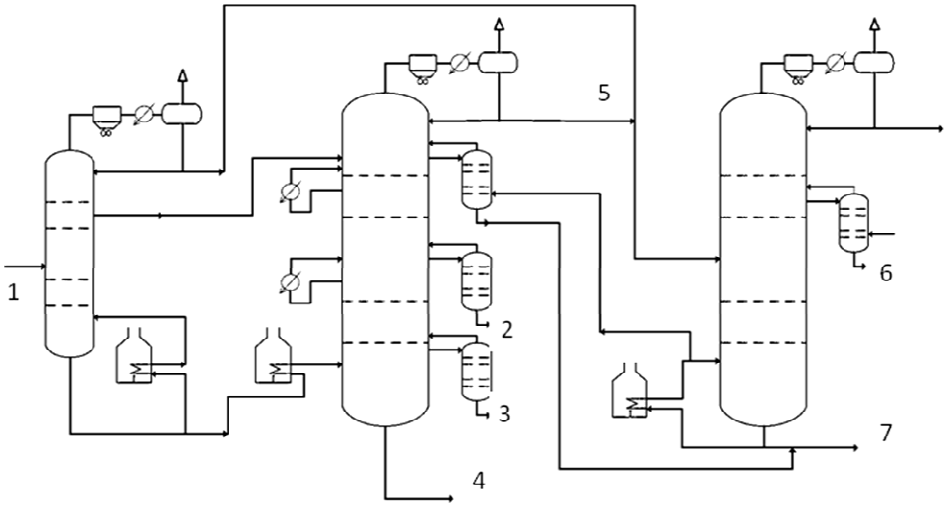

Fig.1. Scheme petroleum refining and stabilization of gasoline in the columns partially bound threads.

1-oil; 2 - kerosine; 3-diesel; 4 - heavy fuel oil; 5 - unstable gasoline; 6 - light fraction of gasoline; 7 - heavy fraction of gasoline.

Operation rectification of benzene from reforming product is the most abundant element schemes of modern gasoline production at the refinery, with the most simple to the organizational and technical terms, a way of refining gasoline [9]. Typically, an energy efficient process of

removing the benzene from reformate product is output sidestream from the middle of the benzene fraction stabilizer.

Historically, Russia was first developed in 1992 and implemented in practice in 1994, the method of allocating the benzene fraction of the side stream of the stabilizer on section 200 LK-6U of Achinsk refinery [10, 11, 12].

That is the way to go of "LUKOIL - Nizhegorodnefteorgsintez", "LUKOIL - Volgogradneftepererabotka" and another four refineries "NK" Rosneft " in organizing processes of gasoline with quality, meet the standards of the Technical Regulations. The main purpose of all of the objects is the allocation of the benzene fraction from reforming catalysate. Energy-saving methods for isolating the benzene fraction by sidestream of stabilization column reforming product were implemented on the reformer of "Novokuibyshev" refinery in the 2010, block of reformate separation of "Angarsk" refinery intended for removing benzene forming fraction from stable catalysate, put into production in 2008, 2010 started on a block of "Syzran" refinery, the benzene extraction unit fractions L-35-11 / 1000 of "Kuibyshev" refinery output of 700 thousand tons per year, launched in 2011 [12].

The widespread use of the technology in practice highlight the benzene fraction of reforming product by sidestream from stabilizer proves its high efficiency and method for improving the environmental properties of gasoline in a short time and with minimal capital investment.

The benzene fraction may be recycled into high-octane products with reduced content of aromatic hydrocarbons, which allows to reduce the concentration of benzene and total arenes compounded automobile gasolines, while not reducing the resources and octane characteristics [13].

Scientists of the Department of Oil and Gas Technology USPTU led by professors M.A. Tanatarov, A.F. Akhmetov and K.G. Abdulminev at 1970’th, was justified the necessity of reducing the content of aromatic hydrocarbons, including benzene, in motor gasolines. Proposed technology to produce gasolines benzene content below 1%, which leads to reduction of toxicity of gasoline and reduction of hydrocarbon content, and benzopyrene in the exhaust gases. Developed a process "RIGIZ" (Figure 2), the essence of which is as follows.

Reformate undergoes rectification separation of the head and residual fractions. The overhead fraction comprising 22-25% of aromatic hydrocarbons, including the major part (85%) of benzene is subjected to hydroisomerization on platinum catalyst. As a result, benzene hydroisomerized almost completely without lowering the octane number. By mixing hydroisomerization product with residual fraction of high-octane reformate receive basic component of motor gasoline with improved environmental performance. Scientific bases "RIGIZ" technology is now widely used in practice, domestic and foreign firms: "OLKAT", "NPP NEFTEKHIM" technology "Bensat", "Peneks-Plast", "Alkimaks" [13, 14].

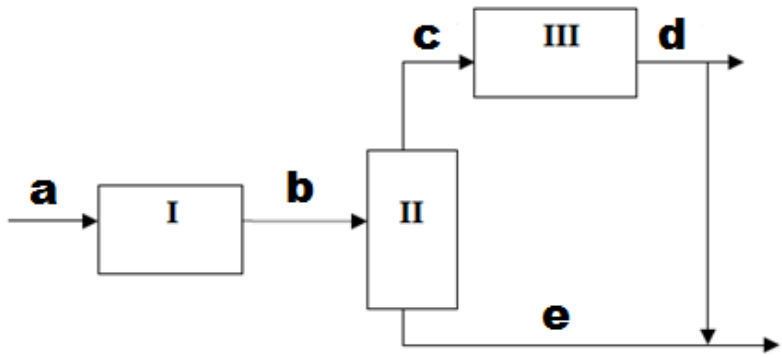

Fig.2. "RIGIZ" process:

I - reforming reactor; II - reformate separation unit; III - hydroisomerization reactor.

a – feedstock; b – reformate; c - fraction of the initial boiling point - 85ºC;

d - hydroisomerization product; e - fraction of 85 - the end of the boil.

The best option is a combined technology hydroisomerization. This technology can be implemented in existing facilities isomerization refineries without significant costs by retrofitting an additional low-temperature isomerization reactor installation and gives you the opportunity to reduce energy consumption by heating raw materials isomerization by hot product hydroisomerization process [15].

Implementation on refineries proposed energy-saving technologies relevant in connection with the stringent environmental requirements for motor gasoline benzene content.

References

1. Patent number 1806168 USSR. A method of refining / Glozman A.B., Kondratyev A.A., Demenkov V.N., Sidorov G.M. and others. Bull. fig. №12 - 1993.

2. Sidorov G.M., Demenkov V.N., Moshchenko G.G., and others. Obtaining heavy gasoline fraction - raw reforming process in a fractionation column // Oil Refining and Petrochemicals. - 1993.- №12. -P.16-21.

3. Patent number 2063997 Russian Federation. A method of refining / Kondratyev A.A., Demenkov V.N., Sidorov G.M. and others. Bull. №20 -1996.

4. Patent number 542 Republic of Kazakhstan. A method of refining / Glozman A.B., Kondratyev A.A., Demenkov V.N., Sidorov G.M. and others. Bull. fig. Number 8 - 1996.

5. Demenkov V.N., Sidorov G.M., Dem'yanenko E.A., and others. Improving the quality of separation products in the stabilization of straight-run gasoline // Chemistry and technology of fuels and oils. -1994.- №1. -P.14 -16.

6. Sidorov G.M., Demenkov V.N., Kondratyev A.A., and others. Output side stream of straight-run gasoline stabilizer. - In .: Oil production, refining, petrochemicals and catalysis // Materials 1 congress of chemists petrochemists refiners and workers building materials industry of the Republic of Bashkortostan. - Ufa, -1992. - P. 45-48.

7. Patent number 1838378 USSR. Method for processing straight-run gasoline fractions / Glozman A.B., Balanich A.A., Kondratyev A.A., Demenkov V.N., Sidorov G.M., and others. Bull. fig. Number 32 -1993.

8. Patent number 2005767 Russian Federation. Method for processing straight-run gasoline fractions / Glozman A.B., Kondratyev A.A., Demenkov V.N., Sidorov G.M., and others. Bull. fig. Number 1 -1994.

9. A.F. Akhmetov, Tanatarov M.A., Abdulminev K.G. and others. production of high octane gasoline and aromatic hydrocarbons by fractionation reformates wide gasoline fractions // Refining and Petrochemicals. - 1985. - № 2. - P. 3-5.

10 Balanich A.A., Sidorov G.M., Demenkov V.N. and others. Development of technology for isolation of high-octane fraction of reforming catalysate // Refining and Petrochemicals. -1994. - № 3 -P.13-18.

11. Patent 2069226 Russian Federation. A method for producing gasoline components / Demenkov V.N., Kondratyev A.A., Balanich A.A. and others. - Bull. fig. Number 32 -1996.

12. Lukanov D.A., Lubsandorzhieva L.K. Kuzora I.E., Bogdanchikov S.A., Belov O.A., Fedorov A.A., Flyagin I.V., Sinichkin V.Y. Rectification - the main method removal of benzene reforming catalysate // Refining and Petrochemicals. - 2013. - № 4. - P. 3-8.

13. A.F. Akhmetov, Development of a combined technology of high-octane unleaded gasoline and aromatics: dis. Dr. ... tehn. Sciences. - Ufa, 1986 - 335 p.

14. Maryshev V.B., Mozhayko V.N., Sorokin I.I., Removal of benzene from reformate. The catalyst and process hydroisomerization of benzene // Refining and Petrochemicals. - 2005. - № 9. - P. 9-10.

15. Akhmetov T.V., Teregulova E.I., Abdulminev K.G., Bogdanova Z.H. Dining combined technology of catalytic reforming and isomerisation gasoline fractions // Electronic scientific journal "Oil and Gas Business". 2013. №3. P. 284-290. URL: http://www.ogbus.ru/authors/AkhmetovTV/AkhmetovTV_1.pdf