Doctor of technical Sciences, Professor Kravchenko Andrey Mikhailovich
correspondent member of the Russian Academy of natural Sciences,
the honored worker of a science and education
Professor of the Department of General professional courses of the Ryazan higher airborne command school (military Institute) named army-General Margelov V.F.

THE METHOD OF REGISTRATION OF A VERY SMALL DEFORMATIONS SOLIDS AND A DEVICE FOR ITS IMPLEMENTATION

The method of registration of extremely small deformations of solids and device for its implementation (figure 1) which is characterized by high accuracy (from 10-5 of a degree and above), visibility and availability of the equipment when measured in terms of University laboratories and industrial production. The essence of the method consists in visual registration of movement value of the reflection of the laser beam from the source fixed on a deformed body, on a scale with the price of division by 0,1 mm and less, increased with the help of a PC and appropriate software to fit the screen of the monitor.

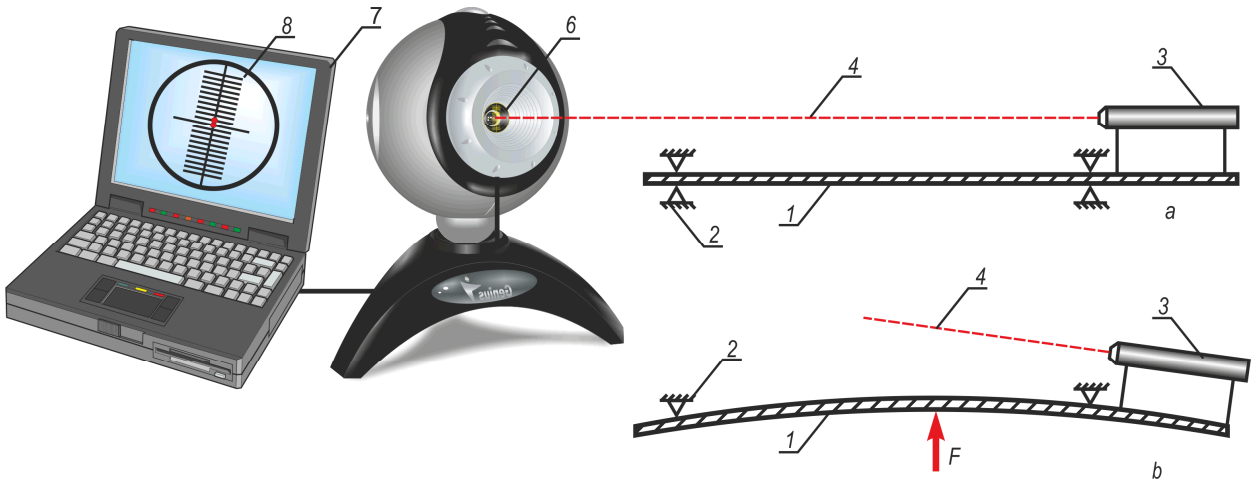

1 - deformable body (beam); 2 - support; 3 - a source of laser radiation;
4 - the laser beam; 5 - evaluation unit (Web camera); 6 - measuring scale; 7 - PC;
8 - a magnified image of the measurement scale with traces of laser beam reflection
Figure 1

The sequence of actions for realization of this method consists in the following. The transparent material (film) is applied to the image of the measurement scale required by division. Price value division depends on the resolution of the recording instrument and

the print device. For example, on an everyday laser printer manages to make a measurement scale with a degree value to 0.1 mm. On the professional polygraphic equipment division values can be reduced to 0.001 mm. The size of the scale should match the size of the lens of the recording instrument. As a recording device is used the device to send the video in real time on the screen monitor of PC, such as Web-camera.

In the initial position at test a solid fix a laser light source so that the longitudinal axis lying in one plane with the plane deformation of the body. The measuring scale is fixed on the lens of the recording instrument. The evaluation unit is fixed motionless regardless of deformable body at a distance L from the laser source. Include the source of laser radiation and on the screen monitor of PC align position of the recording instrument and source of laser radiation so that the laser beam was in the Central (zero) position of the measurement scale (position I in the figure 2,a).

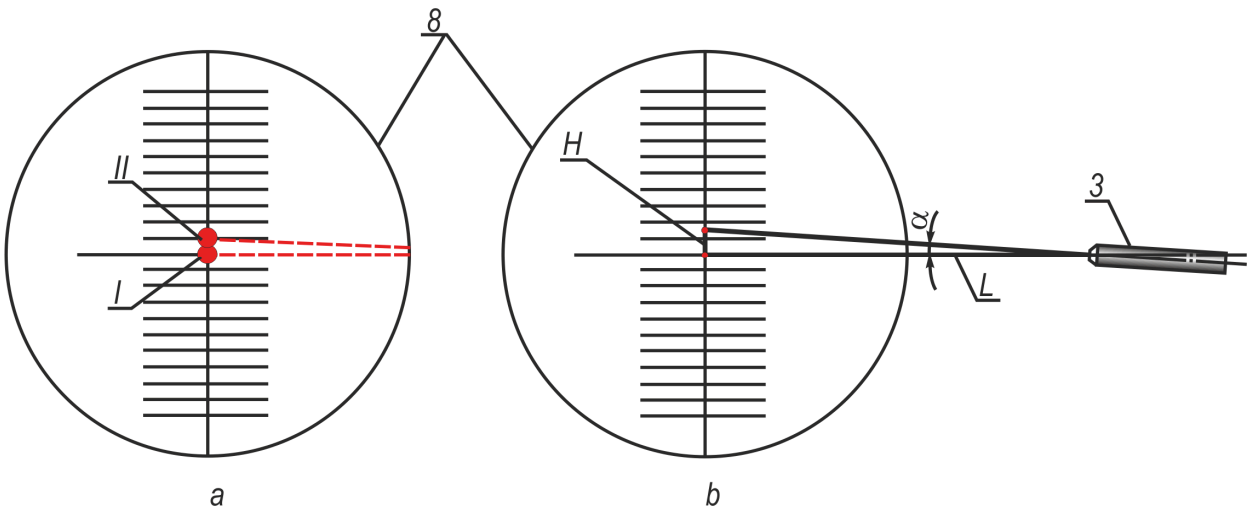

Figure 2

To register deformation value, proceed as follows. To the solid of the applied force F, causing it to deform (bend) (figure 1,b). The laser beam is moved from its original position I to position II (figure 2,a) on the value of offset H (figure 2,b), which is recorded visually on a zoomed image, a measuring scale on the screen of PC.

Knowing the distance L between the source of laser radiation and the lens of the evaluation unit located on it, a measuring scale (figure 2,b) we can calculate the angle of deviation of the laser beam from a zero position of α by trigonometric dependence

$$\alpha = arctg(H/L).$$

This function is easily algorithmization and, therefore, it is possible to automate calculations using computer equipment. Figure 3 shows a fragment of an Excel spreadsheet with the calculation of the parameters of the measuring system.

If necessary, we can increase the accuracy of measuring the angle deformation bending α of a rigid body in the following ways:

- reduction of the price of division of a measuring scale while increasing the resolution of the recording instrument (Web camera) and image size scale (the screen monitor of PC, the application of projection equipment);

- increase of the distance L from the laser source to the lens of the evaluation unit located on it, a measuring scale.

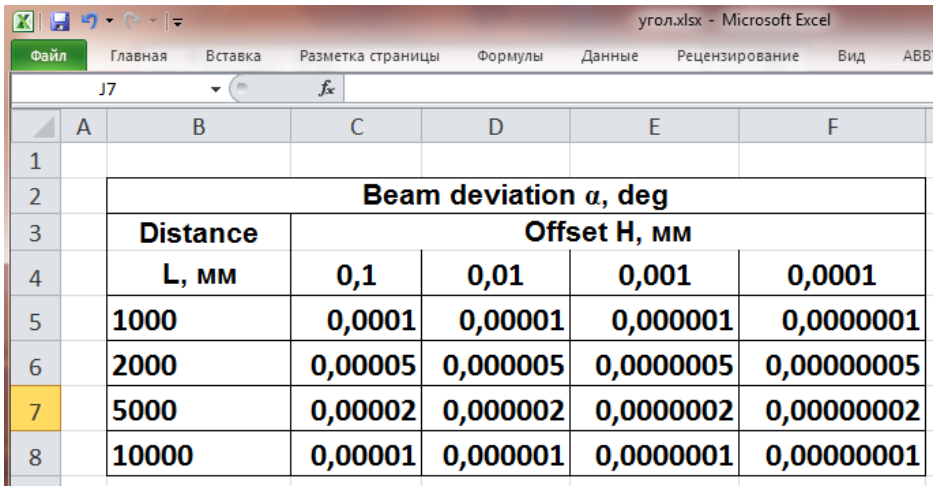

	Beam deviation α, deg			
Distance	Offset H, мм			
L, мм	0,1	0,01	0,001	0,0001
1000	0,0001	0,00001	0,000001	0,0000001
2000	0,00005	0,000005	0,0000005	0,00000005
5000	0,00002	0,000002	0,0000002	0,00000002
10000	0,00001	0,000001	0,0000001	0,00000001

Figure 3

Simulate the processes of deformation occurring in solids under the influence extremely small or large loads appears favorable, with this system solid modeling, as Autodesk Inventor Professional. For this perform the 3D model of the system and assign the properties of real materials of construction, as in the example in figure 4.

Figure 5 shows the result of the analysis of the voltage appearing on the site of railway rail carbon steel, length 1 m under the action of load F=0,01 N (1g). It is seen that the maximum deformation is $1{,}176 \cdot 10^{-8}$ mm (figure 5, a) and the maximum voltage is approximately $4 \cdot 10^{-6}$ MPa (figure 5, b).

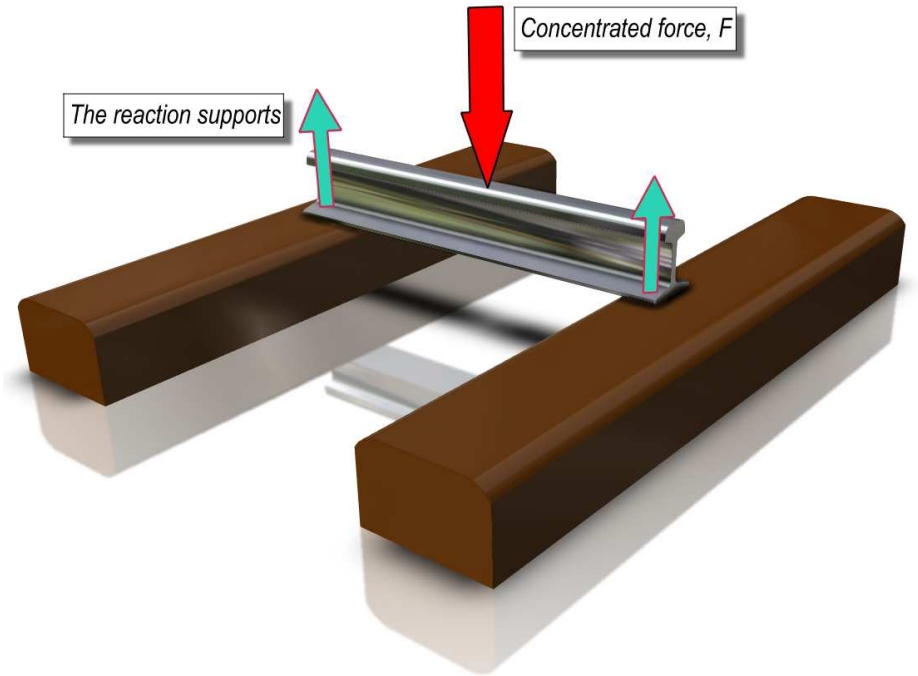

Figure 4

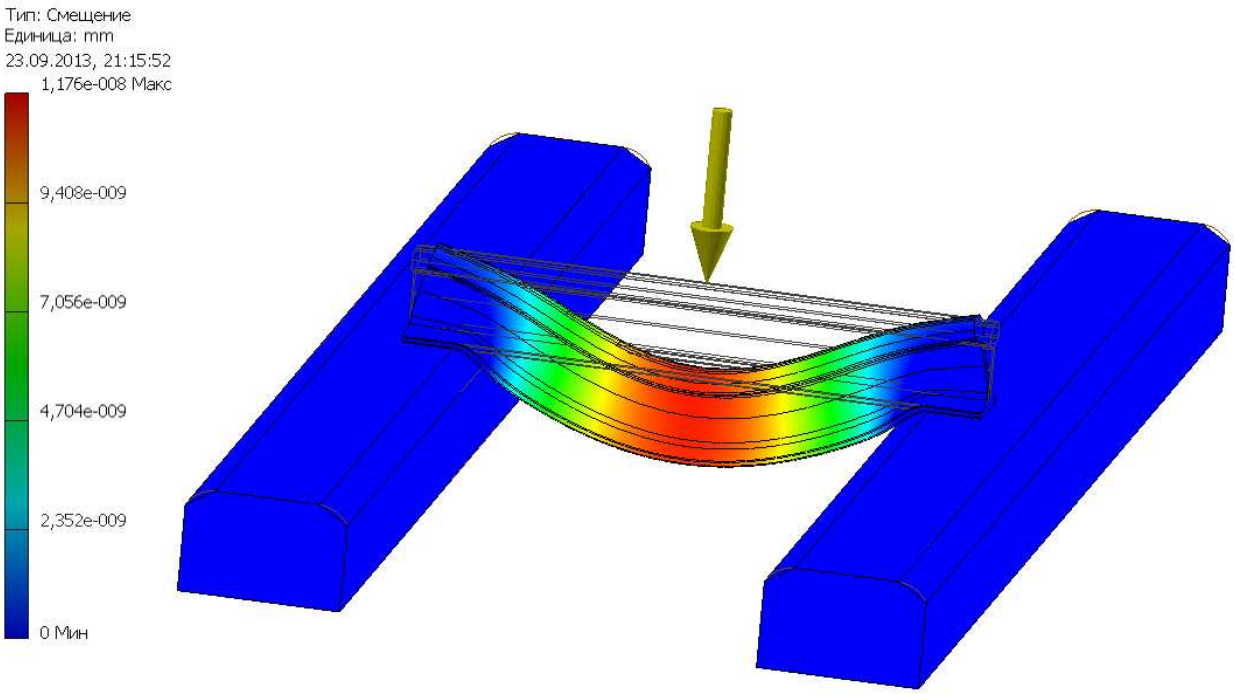

Figure 5, a

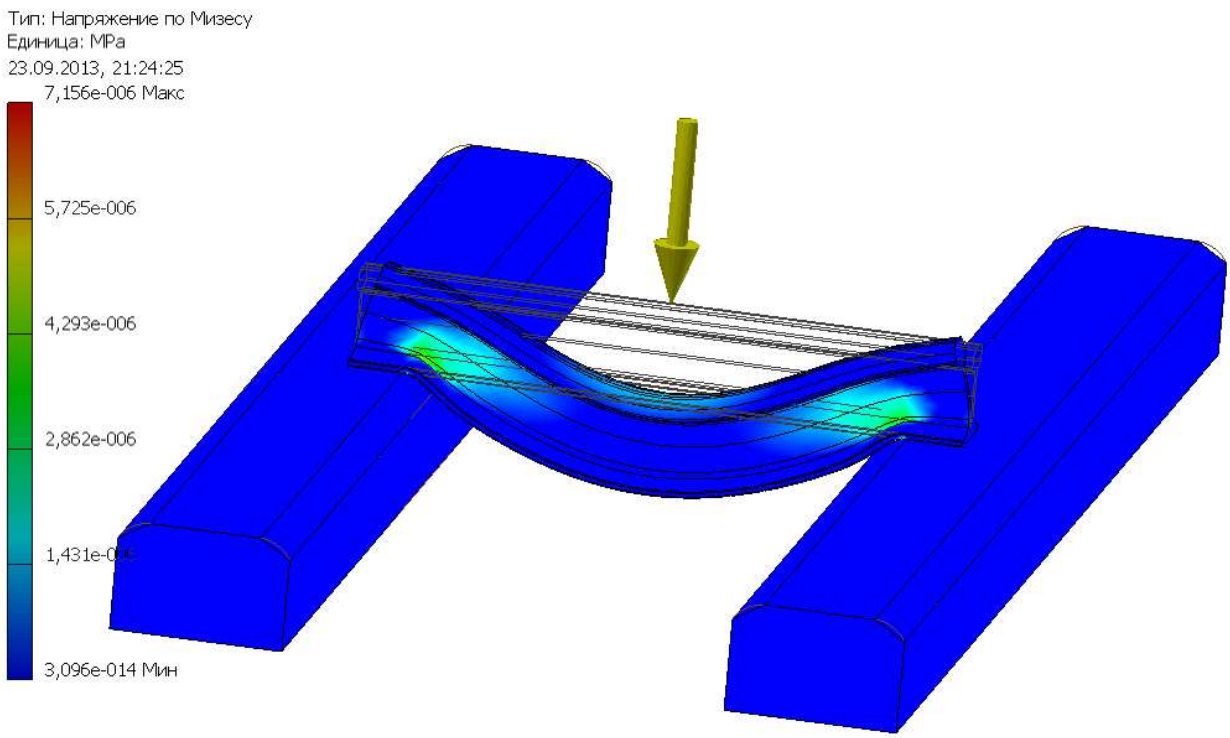

Figure 5,b

It is obvious that in normal conditions commit such small values of the strain and stress is almost impossible. This shows the importance of the proposed method for evaluation of the degree of influence of various factors on ensuring the reliability of technical systems.

Conclusions: the proposed method of measuring the bending of solids can be useful when conducting training, research and testing of new materials in the conditions of educational, research and industrial laboratories. Currently expect to receive a positive decision on granting a patent for an invention in fact stated technical decisions and planned complex of actions on modeling the influence of the parameters of the measuring complex on the accuracy of measurement of other kinds of deformations of solids.